P.O. BOX 420
295 COMMERCE WAY
UPPER SANDUSKY, OH 43351
PH: (419)294-3373 FAX: (419)294-3329
WWW.doverrollersutters.com

N35 ORDER FORM

CUSTOMER:_____ P.O. #:_____
CONTACT:_____ QTY:_____ PRICE:_____
PHONE:_____ EMAIL:_____
FREIGHT: _____ SHIPPING ADDRESS: _____

STANDARD COMPONENT PROFILES

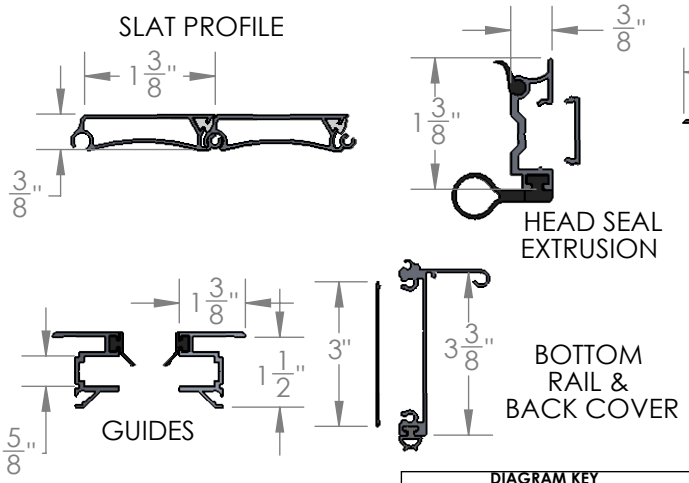

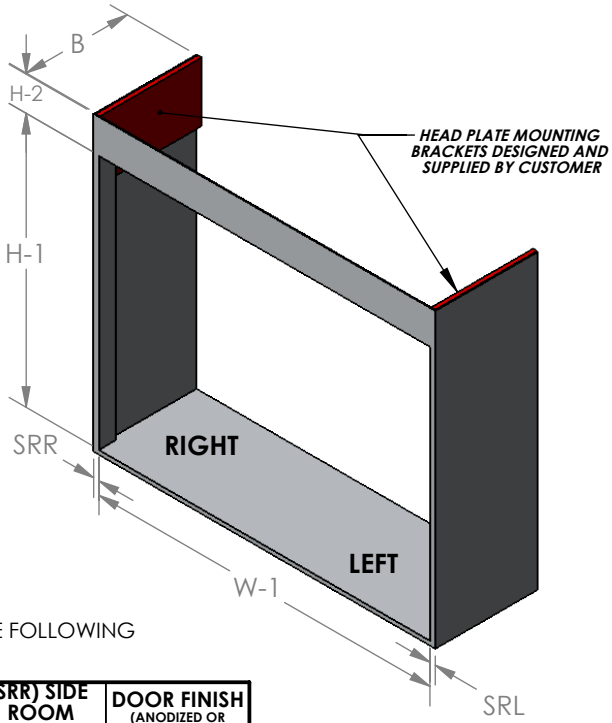

DIAGRAM KEY
H-1: OVERALL OPENING HEIGHT
H-2: OVERALL HEAD ROOM (TOP OF OPENING TO CEILING)
W-1:OVERALL OPENING WIDTH
B: BACK ROOM
SRL: SIDE ROOM LEFT
SRR: SIDE ROOM RIGHT
VIEWS SHOW PROPER DIMENSION PLACEMENT

INSTRUCTIONS:

PLEASE CAREFULLY MEASURE YOUR OPENING(s) AND FILL IN THE FOLLOWING

QTY.	(W-1) OPENING WIDTH	(H-1) OPENING HEIGHT	(H-2) HEAD ROOM	(B) BACK ROOM	(SRL) SIDE ROOM LEFT	(SRR) SIDE ROOM RIGHT	DOOR FINISH (ANODIZED OR POWDER COATED)

DOOR NOTES:

☐ BAR LOCK

TYPE:
☐A. LOCKING ☐ B.NON-LOCKING

DOOR AJAR SWITCH AND LED LIGHTS WILL BE SENT LOOSE. IT IS CUSTOMER'S RESPONSIBILITY TO INSTALL UNLESS OTHERWISE ARRANGED.

☐ DOOR AJAR SWITCH WITH MAGNET

☐ LED LIGHTING

SIZE(INCHES)_____QTY_____

PLEASE ALLOW 14 BUSINESS DAYS FROM THE THE ORDER DATE TILL SHIP DATE. YOU MAY SIGN AND RETURN YOUR ORDER via FAX AT 419-294-3329. ONCE THE ORDER IS SIGNED AND RETURNED , WE CAN BEGIN PRODUCTION ON YOUR ROLLER SHUTTERS.

I ACCEPT AND CONFIRM THIS ORDER:_____

CUSTOMER CONFIRMATION SIGNATURE **DATE**